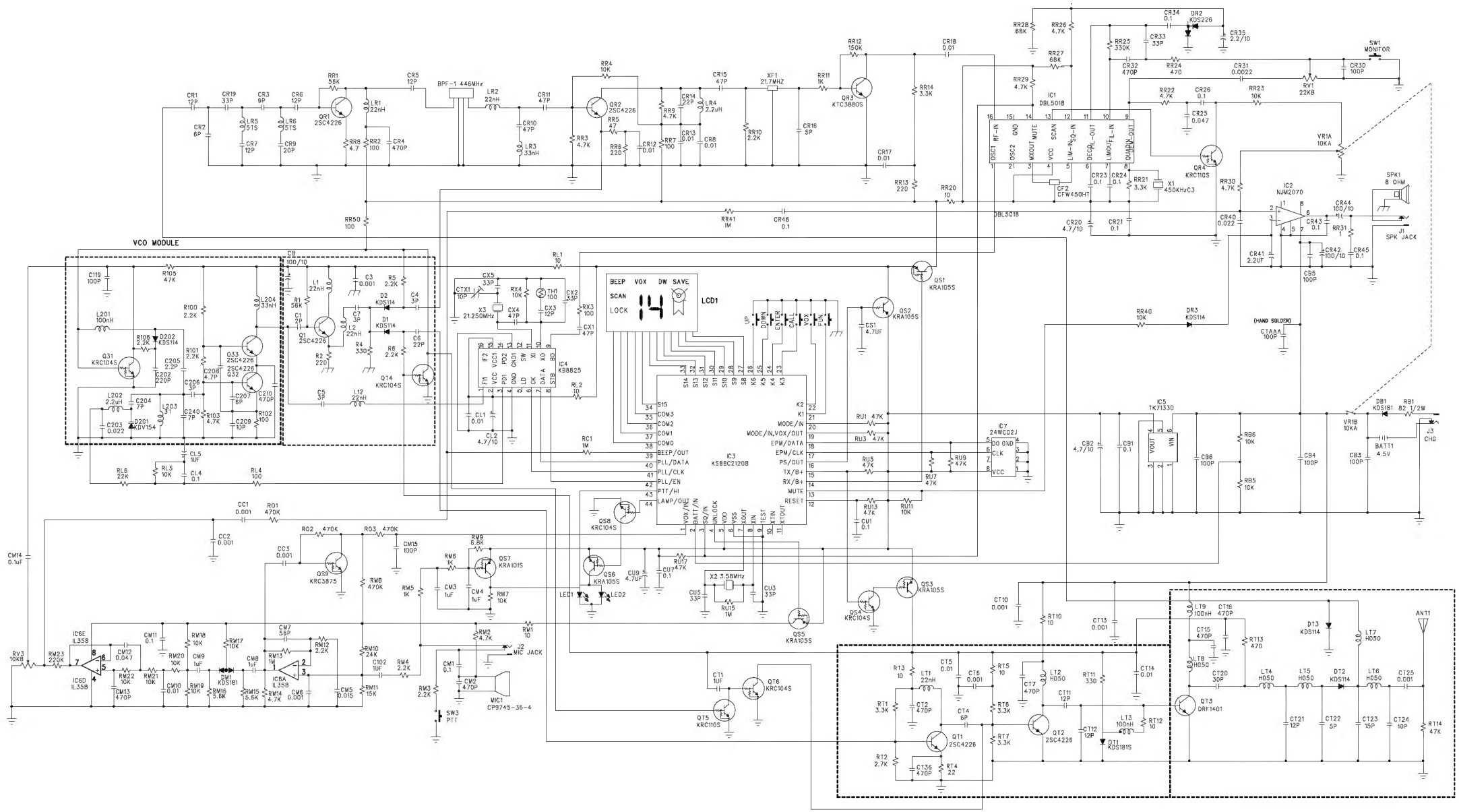
VCO MODULE
LCD1
BEEP
VOX
DW
SAVE
SCAN
LOCK
IC3
KSBBC2120B
IC4
KB8825
IC1
DBL5018
IC2
NJM2070
IC5
TK71330
IC7
24WC02J
IC6E
IL358
IC6D
IL358
IC6A
IL358
BPF-1 446MHz
X1
450KHzC3
X2 3.58MHz
X3
21.250MHz
XF1
21.7MHZ
SW1
MONITOR
SPK1
8 OHM
J1
SPK JACK
J2
MIC JACK
MIC1
CP9745-36-4
SW3
PTT
J3
CHG
BATT1
4.5V
ANT1
(HAND SOLDER)